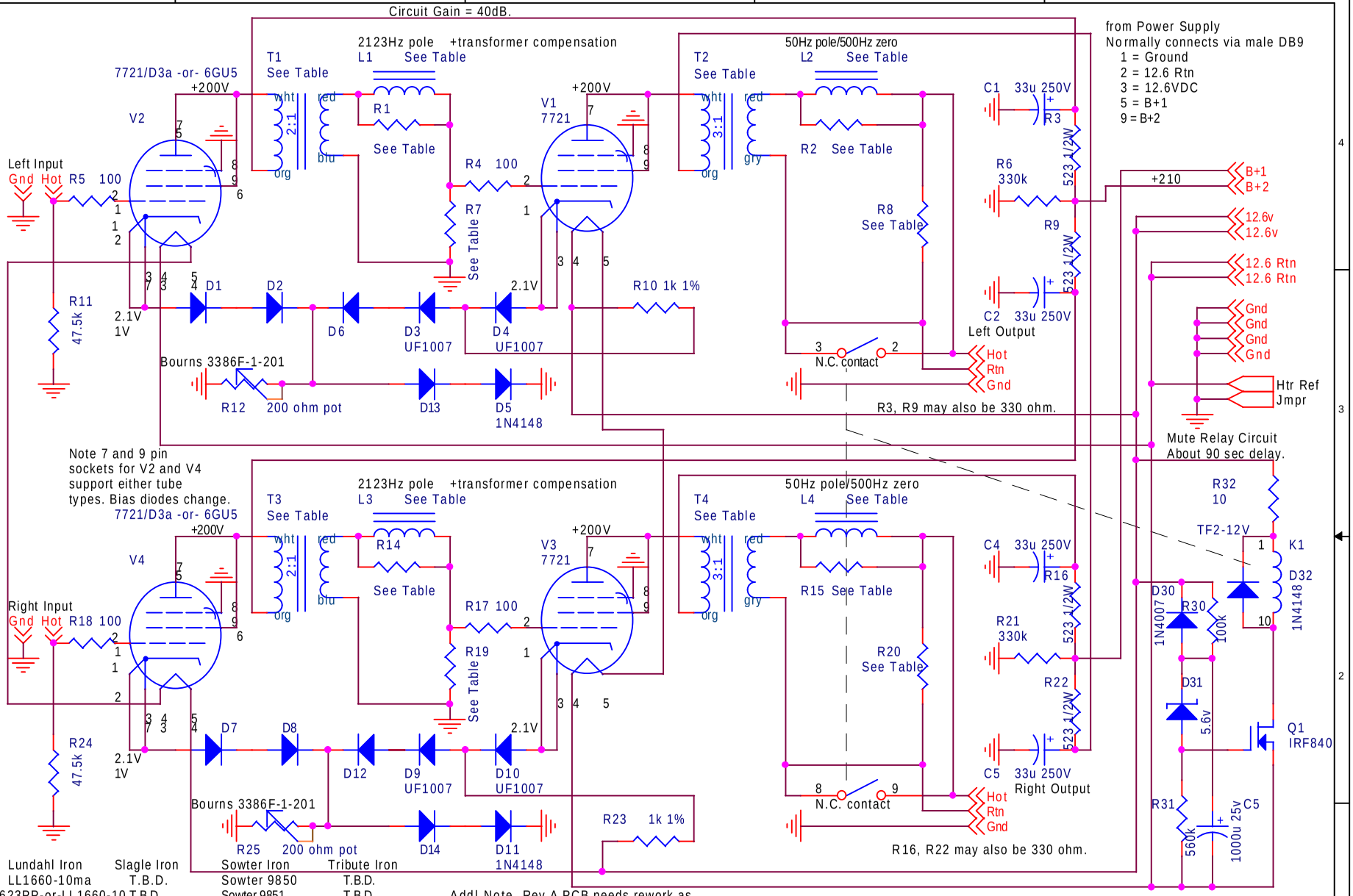

	Lundahl Iron	Slagle Iron	Sowter Iron	Tribute Iron
T1/T3	LL1660-10ma	T.B.D.	Sowter 9850	T.B.D.
T2/T4	LL1623PP-or-LL1660-10	T.B.D.	Sowter 9851	T.B.D.
L1/L3	LL4610(450mH)	T.B.D.	Sowter 9852	T.B.D.
L2/L4	LL4610 (1.8H)	T.B.D.	Sowter 9853	T.B.D.
V2/V4	6GU5	T.B.D.	D3a/7721	T.B.D.
R1/R14	26.7k 1%	T.B.D.	150k 1%	T.B.D.
R7/R19	5.23k 1%	T.B.D.	8.06k 1%	T.B.D.
R2/R15	5.90k 1%	T.B.D.	7.68k 1% (*)	T.B.D.
R8/R20	715 1%	T.B.D.	909 1% (*)	T.B.D.
D1/D7	1N5818	T.B.D.	UF1007	T.B.D.
D2/D8	n/u(short)	T.B.D.	UF1007	T.B.D.
D6/D12	n/u(short)	T.B.D.	n/u(short)	T.B.D.
D13/D14	n/u(short)	T.B.D.	n/u(short)	T.B.D.

Addl Note. Rev A PCB needs rework as...
1. D6A to D6K to D13K; D12A to D12K to D14K
2. D14A to Ground; D14A to Ground
3. R18 bottom to R24 top
Note that D6, D12-14 not used.

(*) I ended up with 7.68k/909 ohms on one channel and 8.25k/1k on the other channel.

(c) Copyright, 2005 Steve Bench. All Rights Reserved.

Title
LR Phono Preamp PCB version

Size	Document Number	Rev
A	lrph_pcb.pdf	A

Date: Monday, August 29, 2005 Sheet 1 of 1